450 Nm

RIDUTTORE SPECIALE / SPECIAL GEARBOXES / SPEZIALGETRIEBE
REDUCTEUR SPECIAL / REDUCTOR ESPECIAL

FS50

n_2 [min^{-1}]	i	P_{1M} [kW]	M_{2M} [Nm]	fs	P_{1R} [kW]	M_{2R} [Nm]	⌀	B5					B14							RD	Ratios code
								B	C	D	E	F	O	P	Q	R	T	U	V		
								63	71	80	90	100 112	56	63	71	80	90	100 112	132		

450 Nm — FS50 — n_1= 1400 min^{-1}

29.3	**47.7**	1.1*	333	1.4	1.48	450	30						B-C	C						93
16.2	**86.3**	0.75*	409	1.1	0.82	450	30						B-C	C						93
14.0	**100.0**	0.75*	474	1	0.70	450	30						B-C	C						93
11.9	**117.4**	0.55*	415	1.1	0.60	450	30						B-C	C						93
10.0	**140.1**	0.37	339	1.3	0.50	450	30						B-C	C						93
7.3	**191.2**	0.37	462	1	0.37	450	30						B-C	C						93
5.6	**149.6**	0.25	404	1.1	0.28	450	30						B-C	C						93
4.2	**329.6**	0.25	533	0.8	0.21	450	30						B-C	C						93

* Solo flangia entrata gr. 71 / Input flange only 71

Motor size	H
63 B5	345
71 B5	355
56 B14	314
63 B14	320
71 B14	328

PFS50FB

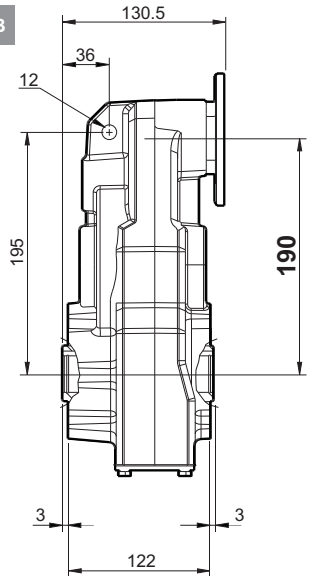

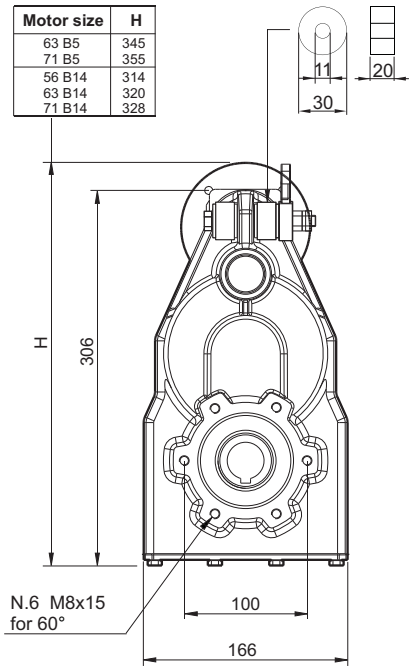

PFS50AU

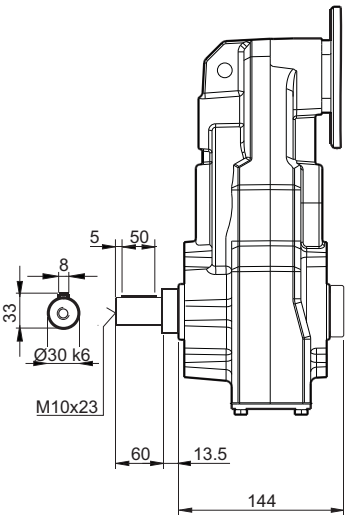

RFS50FB

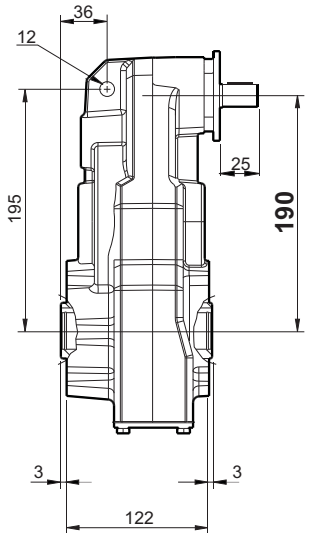

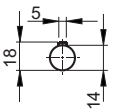

Peso Weight	
Kg	11.5

A Richiesta Uscita ø35 H7
A Richiesta Rulli Conici Uscita
Ø 35 H7 output available at request
Taper roller output available at request
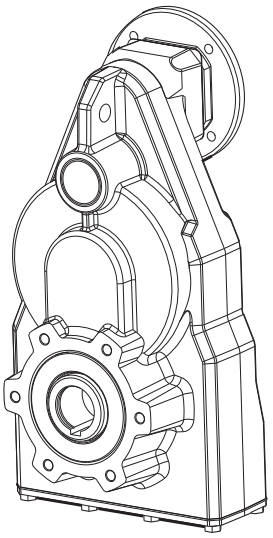
Con olio sintetico per tutte le posizioni With sintetic oil for all positions	
Q.ty	0.95 L